# SLEDR5NDCW

RAB

Round LED Step Lights for solar applications or other 10-30VDC systems. Up to 85% more efficient than line voltage AC solutions. Available in 5W round shaped step lights. Solar panel, battery and controls by others.

Color: White

Weight: 1.2 lbs

| | |
|---|---|
| **Project:** | **Type:** |
| **Prepared By:** | **Date:** |

## Driver Info

| | |
|---|---|
| Type | DC to DC |
| 120V | N/A |
| 208V | N/A |
| 240V | N/A |
| 277V | N/A |
| Input Watts | 5.2W |

## LED Info

| | |
|---|---|
| Watts | 5W |
| Color Temp | 4000K (Neutral) |
| Color Accuracy | 85 CRI |
| L70 Lifespan | 100,000 Hours |
| Lumens | 159 lm |
| Efficacy | 30.6 lm/W |

## Technical Specifications

### Compliance

**UL Listed:**
Suitable for wet locations. Suitable for mounting within 4 ft. of the ground.

**IESNA LM-79 & LM-80 Testing:**
RAB LED luminaires and LED components have been tested by an independent laboratory in accordance with IESNA LM-79 and LM-80.

### Electrical

**THD:**
11.5% at 120V, 21% at 277V

**Electrical Input Specifications:**
MaxW = 5.1W, Input Volts = 10-30V DC, Input Amps = 0.51 - 0.17A.

**Surge Protection:**
1000 Volts

### Performance

**Lifespan:**
100,000-Hour LED lifespan based on IESlm-80 results and TM-21 calculations

**Wattage Equivalency:**
Equivalent to 13W CFL or 60W Incandescent

### Construction

**Finish:**
Formulated for high durability and long-lasting color

**Cold Weather Starting:**
The minimum starting temperature is -40°F (-40°C)

**Maximum Ambient Temperature:**
Suitable for use in up to 104°F (40°C)

**Green Technology:**
Mercury and UV free. RoHS-compliant components.

**Housing:**
Precision die-cast aluminum housing and mounting plate (junction box not included)

**Gaskets:**
High-temperature silicone

### LED Characteristics

**Color Consistency:**
3-step MacAdam Ellipse binning to achieve consistent fixture-to-fixture color

**Lumen Maintenance:**
The LED will deliver 70% of its initial lumens at 100,000 hours of operation

**Color Temperature:**
4000K

### Other

**Patents:**
The design of the SLED Lights are protected by U.S. Pat. D612,974, CA Pat. 133100, and China Pat. ZL201030129138.4.

**Equipment:**
Solar panel, battery and controls by others

**5-Year, No-Compromise Warranty:**
RAB warrants that our LED products will be free from defects in materials and workmanship for a period of five (5) years from the date of delivery to the end user, including coverage of light output, color stability, driver performance and fixture finish. RAB's warranty is subject to all terms and conditions found at rablighting.com/warranty.


Copyright © 2026 RAB Lighting All Rights Reserved Note: Specifications are subject to change at any time without notice

Dimensions

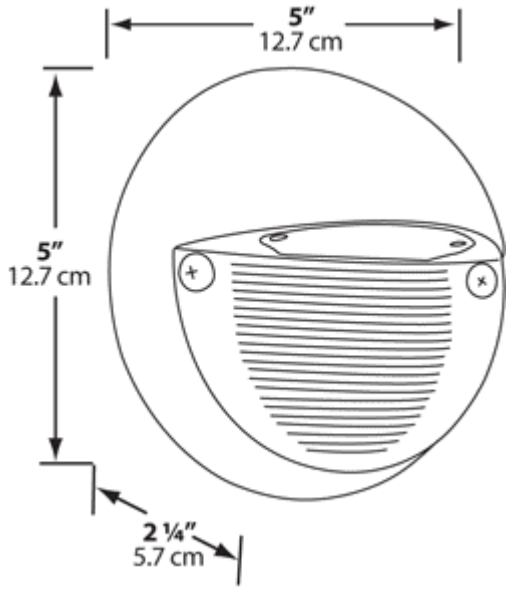



Copyright © 2026 RAB Lighting All Rights Reserved Note: Specifications are subject to change at any time without notice