BOLBASEW

RAB

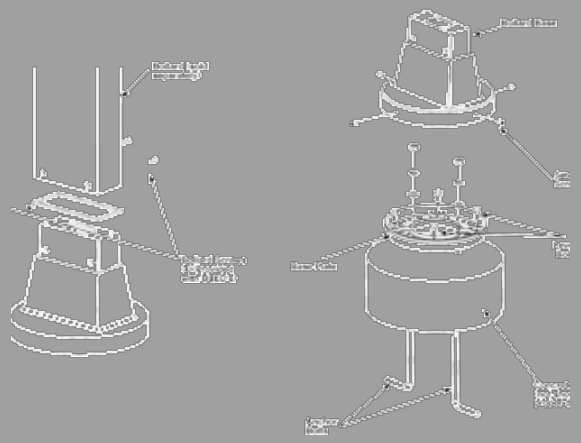

Bollard base adaptor for retro kit no mtg plate/bolts or bollard base adaptor 8" round new w/ mtg plates and bolts.

Color: White

Weight: 4.7 lbs

Project:	Type:
Prepared By:	Date:

Technical Specifications

Compliance

Trade Agreements Act Compliant:
This product is a product of Cambodia and a "designated country" end product that complies with the Trade Agreements Act

Dimensions

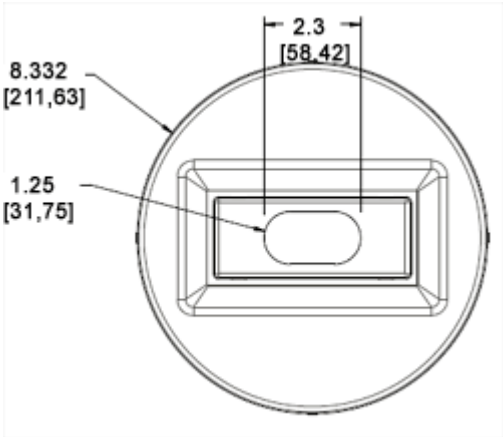

Copyright © 2026 RAB Lighting All Rights Reserved Note: Specifications are subject to change at any time without notice